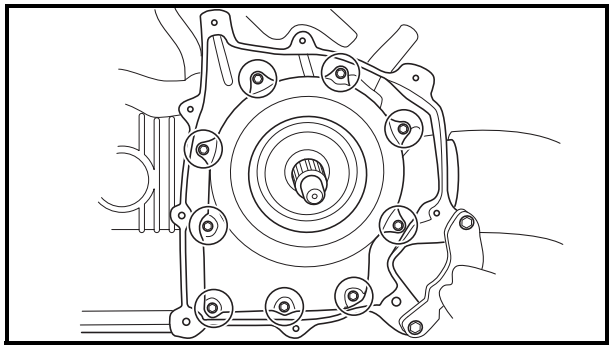

REMOVING THE CLUTCH

1. Remove:
   - clutch housing assembly
   - gasket
   - dowel pins

NOTE:
Working in crisscross pattern, loosen each bolt 1/4 of a turn. Remove them after all of them are loosened.

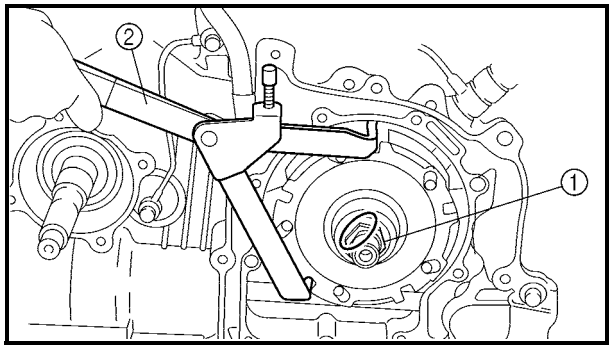

2. Straighten:
   - punched portion of the nut ①
3. Remove:
   - nut ①

NOTE:
Use a universal clutch holder ② to hold the clutch carrier assembly.

	Universal clutch holder **P/N. YM-91042, 90890-04086**

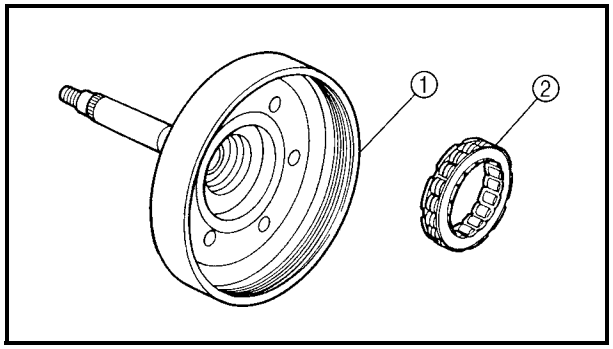

CHECKING THE CLUTCH

1. Check:
   - clutch housing ①
     Heat damage/wear/damage → Replace.
   - one-way clutch bearing ②
     Chafing/wear/damage → Replace.

NOTE:
- Replace the one-way clutch assembly and clutch housing as a set.
- The one-way clutch bearing must be installed with the flange side facing in.

▼▼▼▼▼▼▼▼▼▼▼▼▼▼▼▼▼▼▼▼▼▼▼▼▼▼▼▼▼▼▼▼▼▼

a. Install the one-way clutch bearing and clutch carrier assembly to the clutch housing and hold the clutch carrier assembly.